PROJECT 43: Design and Analysis of Noise of CMOS Inverter by using Cadence Virtuoso

A Comprehensive Study of Analog Circuits

By: Priya Chaudhary, Astitva Johri and
Bhavya Solanki

Chapters:

List of Figures……..…… 3

1. Introduction …….. 4
2. Brief Description…… 5
3. Circuit Design……. 6-7
   3.1 Schematic Design……... 6
   3.2 Simulation Setup...…….. 6
   3.3 Noise Response……..……..…… 6-7
4. Simulation Results…….. 8-9
5. Advantages and Disadvantages…….. 10
   5.1 Advantages……. 10
   5.2 Disadvantages……. 10
6. Conclusion…….. 11
7. Frequently Asked Questions (FAQs)…….. 12

LIST OF FIGURES

Figure 3.1 Circuit of CMOS Inverter ……..7

Figure 3.2 Circuit of CMOS Inverter ……..7

Figure 4.1 Simulation Results of CMOS Inverter (Input Noise) …….……...…..8

Figure 4.2 Simulation Results of CMOS Inverter (Output Noise) …….……...…..8

Figure 4.3 Simulation Results of CMOS Inverter (Output Magnitude Noise) ……..……...…..9

1. INTRODUCTION

Noise is an inherent challenge in the design of CMOS inverters and other digital circuits. As technology scales down and the demand for high-speed, low-power circuits increases, the significance of noise and its impact on circuit performance becomes more critical. CMOS inverters, which form the backbone of digital logic circuits, are susceptible to various noise sources, including thermal noise, flicker noise, power supply variations, and crosstalk. Understanding and analyzing these noise factors is essential for designing reliable, high-performance circuits.

The ability to simulate and analyze noise behavior is vital for optimizing CMOS circuits, as even minor noise-induced voltage fluctuations can lead to logic errors and reduced efficiency. Cadence Virtuoso, a powerful electronic design automation (EDA) tool, provides an advanced simulation environment for noise analysis. By leveraging Virtuoso's capabilities, designers can accurately model and evaluate the noise performance of CMOS inverters, thereby implementing effective noise reduction techniques to enhance circuit stability and efficiency.

This documentation explores the noise characteristics of CMOS inverters, the significance of noise analysis, and the role of Cadence Virtuoso in evaluating and mitigating noise effects. A detailed investigation into noise sources, their impact on performance, and the advantages and disadvantages of noise analysis in CMOS circuits will be discussed.

2. BRIEF DESCRIPTION

A CMOS inverter is a fundamental building block in digital electronics, consisting of complementary MOSFETs—an NMOS and a PMOS transistor—arranged in a push-pull configuration. The inverter operates by switching between logic high and logic low states, making it an essential component of digital logic circuits. However, various noise factors affect the performance of the CMOS inverter, potentially leading to incorrect logic transitions and increased power consumption.

Noise in CMOS inverters originates from multiple sources:

- **Thermal Noise:** Generated due to the random motion of charge carriers in the MOSFET channel, affecting signal clarity.
- **Flicker Noise (1/f Noise):** Arises from charge trapping and detrapping at the silicon-oxide interface, particularly impacting low-frequency applications.
- **Power Supply Noise:** Includes fluctuations in the power supply voltage, causing unwanted variations in the output signal.
- **Process Variations:** Small discrepancies in the fabrication process result in parameter mismatches, affecting noise behavior.
- **Crosstalk:** Occurs when adjacent signal lines interfere with each other, leading to unintended signal coupling.

Cadence Virtuoso provides a robust simulation environment to analyze these noise sources. Designers can perform transient noise analysis, Monte Carlo simulations, and AC noise analysis to study the impact of noise on circuit performance. By evaluating these factors, engineers can implement design optimizations such as better transistor sizing, layout modifications, and power management techniques to minimize noise and enhance circuit reliability.

3. CIRCUIT DESIGN

3.1 Schematic Design

- Open Cadence Virtuoso and create a new cell view for the CMOS inverter.
- Place an NMOS and a PMOS transistor with appropriate width-to-length ratios.
- Connect the transistors' gates to the input, sources to VDD and GND, and drains to form the output node.
- Add power supply, input voltage sources, and load capacitance as required.
- Perform electrical rule checks (ERC) and design rule checks (DRC) to ensure correctness.
- Run DC and transient analyses to verify logical operation.

3.2 Simulation Setup

To analyze noise in the CMOS inverter, set up the following simulations in Cadence Virtuoso:

- **Transient Noise Analysis:** Simulates random noise sources affecting the inverter over time.
- **AC Noise Analysis:** Computes small-signal noise behavior across different frequencies.
- **Monte Carlo Analysis:** Evaluates the impact of process variations and mismatch on noise performance.

3.3 Noise Response

The noise response of a CMOS inverter is evaluated using:

- **Noise Figure:** The ratio of output noise power to input noise power.
- **Signal-to-Noise Ratio (SNR):** Determines circuit robustness against noise.

- **Power Spectral Density (PSD)**: Analyzes noise distribution over frequency.
- **Noise Margin Calculations:** Ensures proper logic-level distinction.

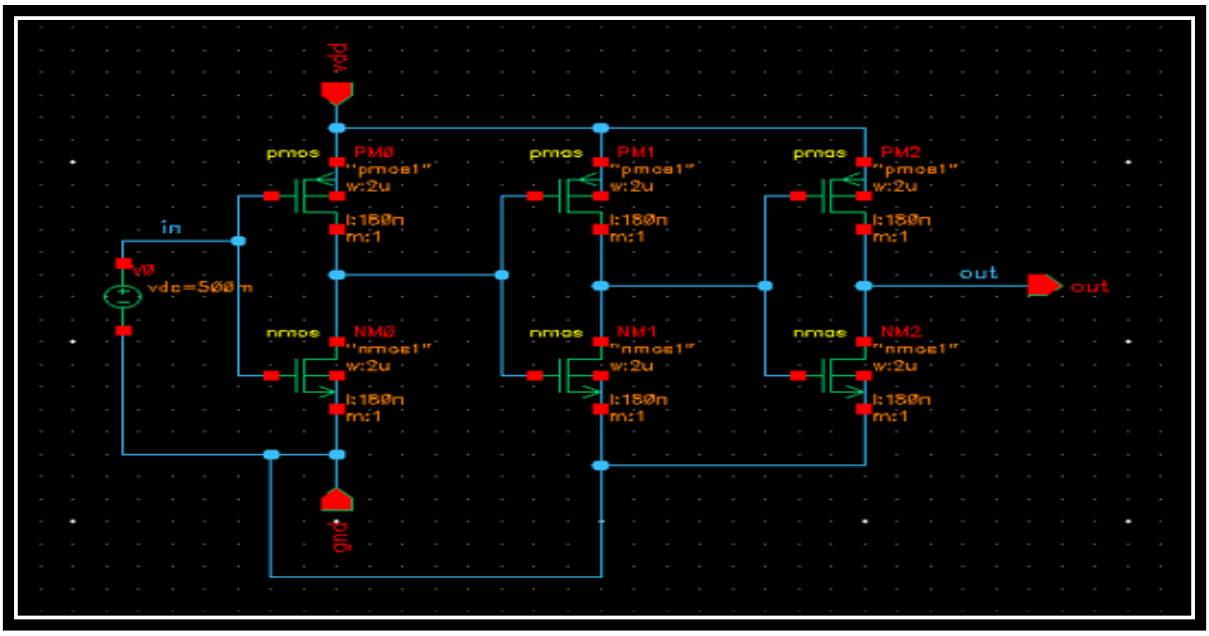

Figure 3.1 Circuit of CMOS Inverter

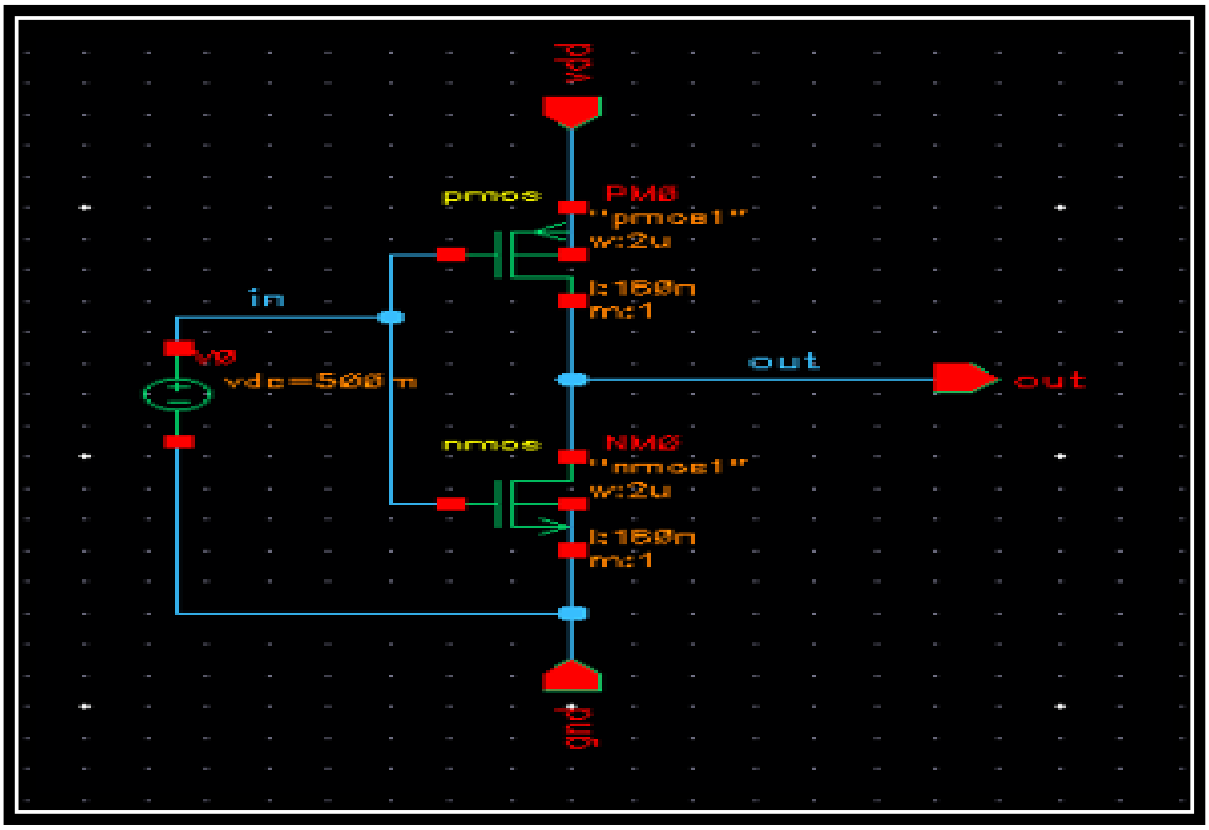

Figure 3.2 Circuit of CMOS Inverter

4. SIMULATION RESULTS

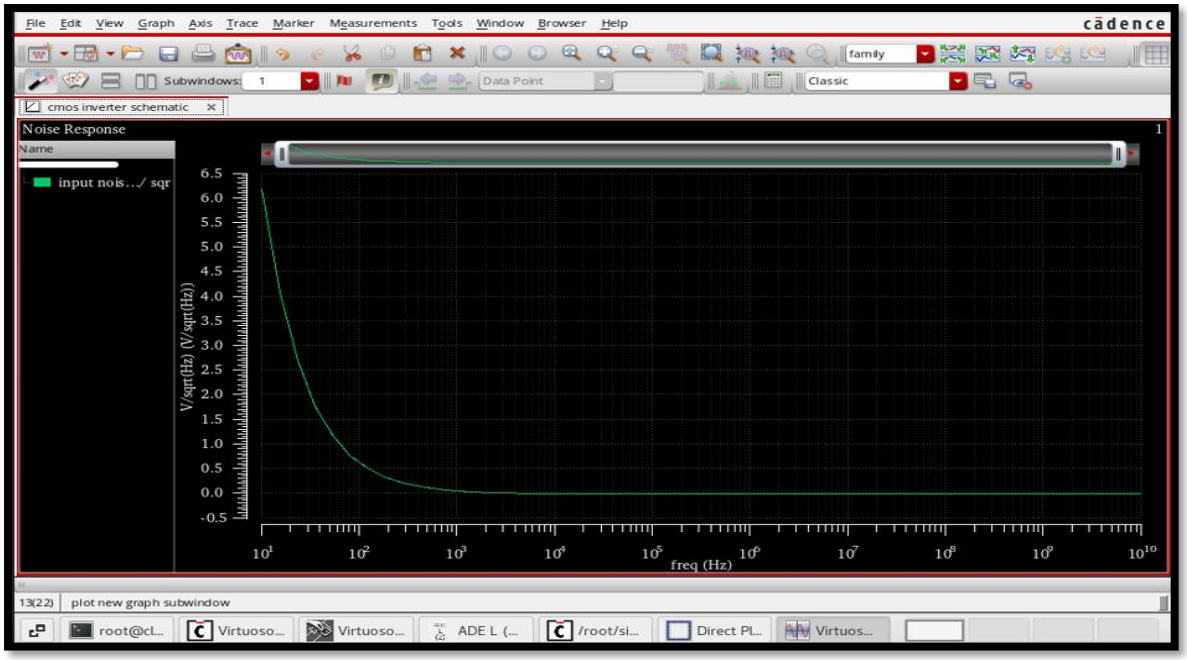

Figure 4.1: Simulation Results of CMOS Inverter (Input Noise)

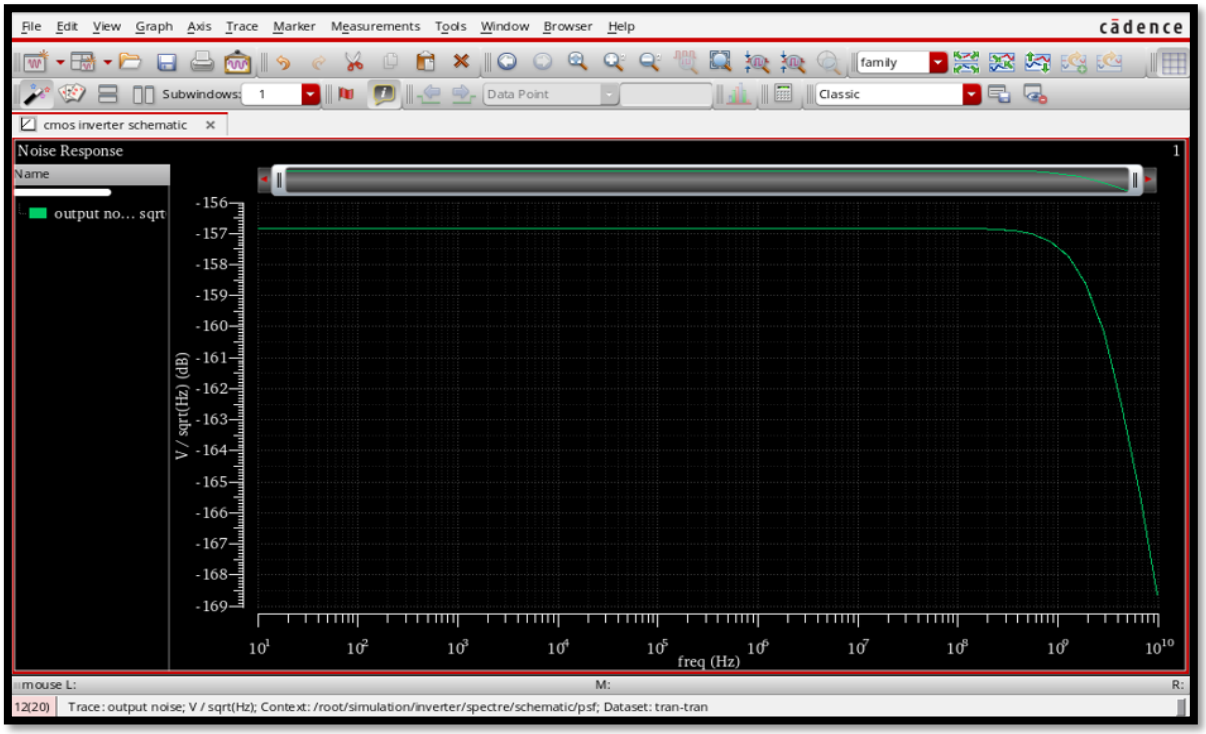

Figure 4.2: Simulation Results of CMOS Inverter (Output Noise)

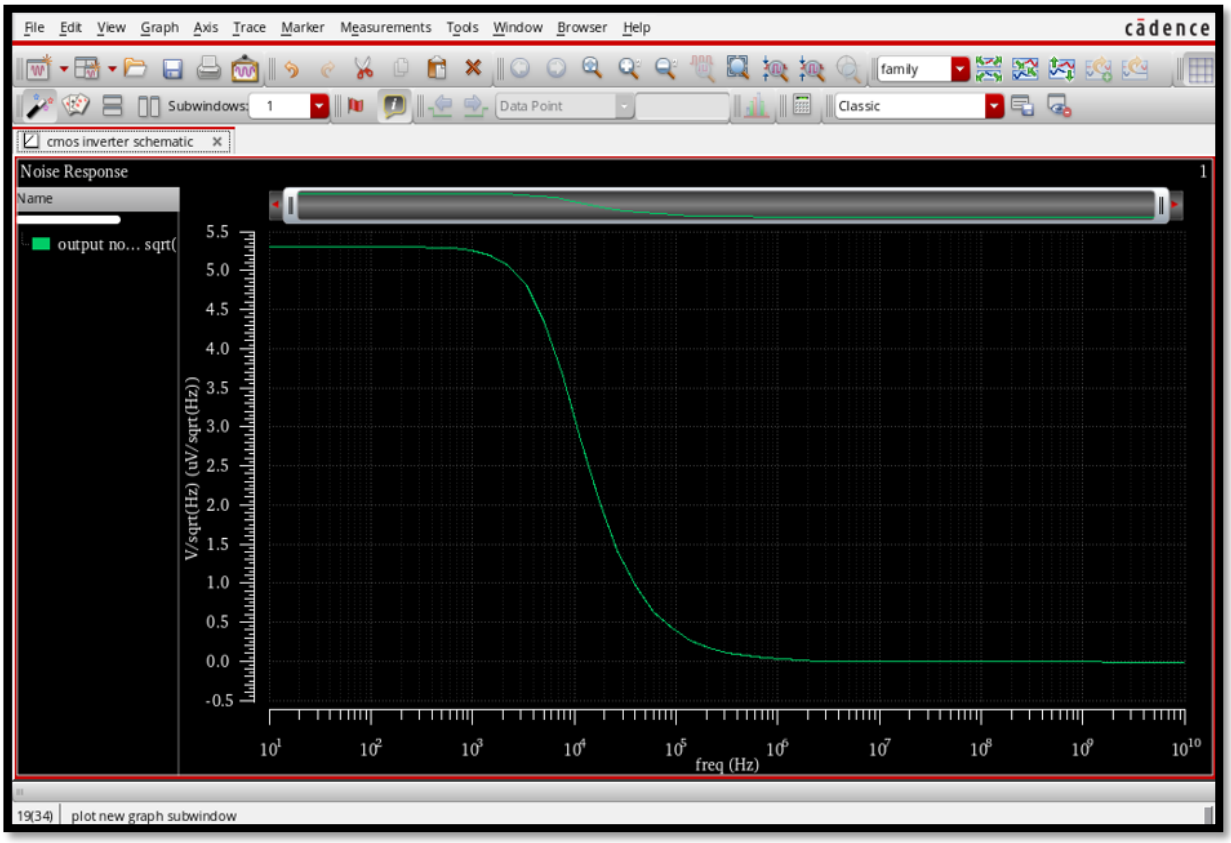

Figure 4.3: Simulation Results of CMOS Inverter (Output Magnitude Noise)

5. ADVANTAGES AND DISADVANTAGES

5.1 Advantages:-

1. **Enhanced Circuit Performance:** Identifying and mitigating noise improves signal integrity.
2. **Optimized Power Consumption:** Helps in designing circuits with better power efficiency.
3. **Improved Reliability:** Reduces the chances of logic errors and failure.
4. **Accurate Simulation:** Cadence Virtuoso provides precise noise modeling and verification.

5.2 Disadvantages:-

1. **Signal Degradation:** Noise can cause unwanted voltage fluctuations leading to logic errors.
2. **Increased Power Consumption:** Certain noise sources contribute to excess power dissipation.
3. **Design Complexity:** Additional circuitry may be required to mitigate noise effects.
4. **Process Variability:** Manufacturing variations can introduce unpredictable noise behavior.

6. CONCLUSION

The study and analysis of noise in CMOS inverters are crucial for ensuring the robustness and efficiency of digital circuits. With the continuous scaling of semiconductor technology, noise-related challenges become more pronounced, requiring advanced simulation tools like Cadence Virtuoso to accurately model and mitigate these effects.

By understanding the sources and impact of noise in CMOS inverters, designers can take proactive measures to minimize noise-induced errors. Techniques such as optimizing power supply design, implementing shielding strategies, and improving transistor layout can significantly enhance circuit performance. Cadence Virtuoso offers a comprehensive suite of tools for noise analysis, enabling precise modeling and optimization of CMOS circuits.

Ultimately, noise analysis helps in improving signal integrity, reducing power consumption, and ensuring the reliable operation of CMOS inverters in high-speed digital applications. As technology continues to advance, noise mitigation strategies will remain a key focus in circuit design, making noise analysis an indispensable part of modern electronic design processes.

7. FREQUENTLY ASKED QUESTIONS (FAQs)

Q1. What are the primary sources of noise in a CMOS inverter?
Answer: The main sources of noise include thermal noise, flicker noise, power supply noise, and process variations.

Q2. How does Cadence Virtuoso help in noise analysis?
Answer: Cadence Virtuoso provides advanced simulation tools to model, analyze, and mitigate noise effects in CMOS circuits.

Q3. What techniques can be used to reduce noise in CMOS inverters?
Answer: Techniques include proper power supply design, layout optimization, and the use of decoupling capacitors.

Q4. Why is noise analysis important in CMOS circuit design?
Answer: Noise analysis ensures signal integrity, improves reliability, and prevents logic errors in digital circuits.

Q5. What impact does process variation have on noise in CMOS inverters?
Answer: Process variations can cause fluctuations in transistor parameters, leading to increased noise and performance degradation.